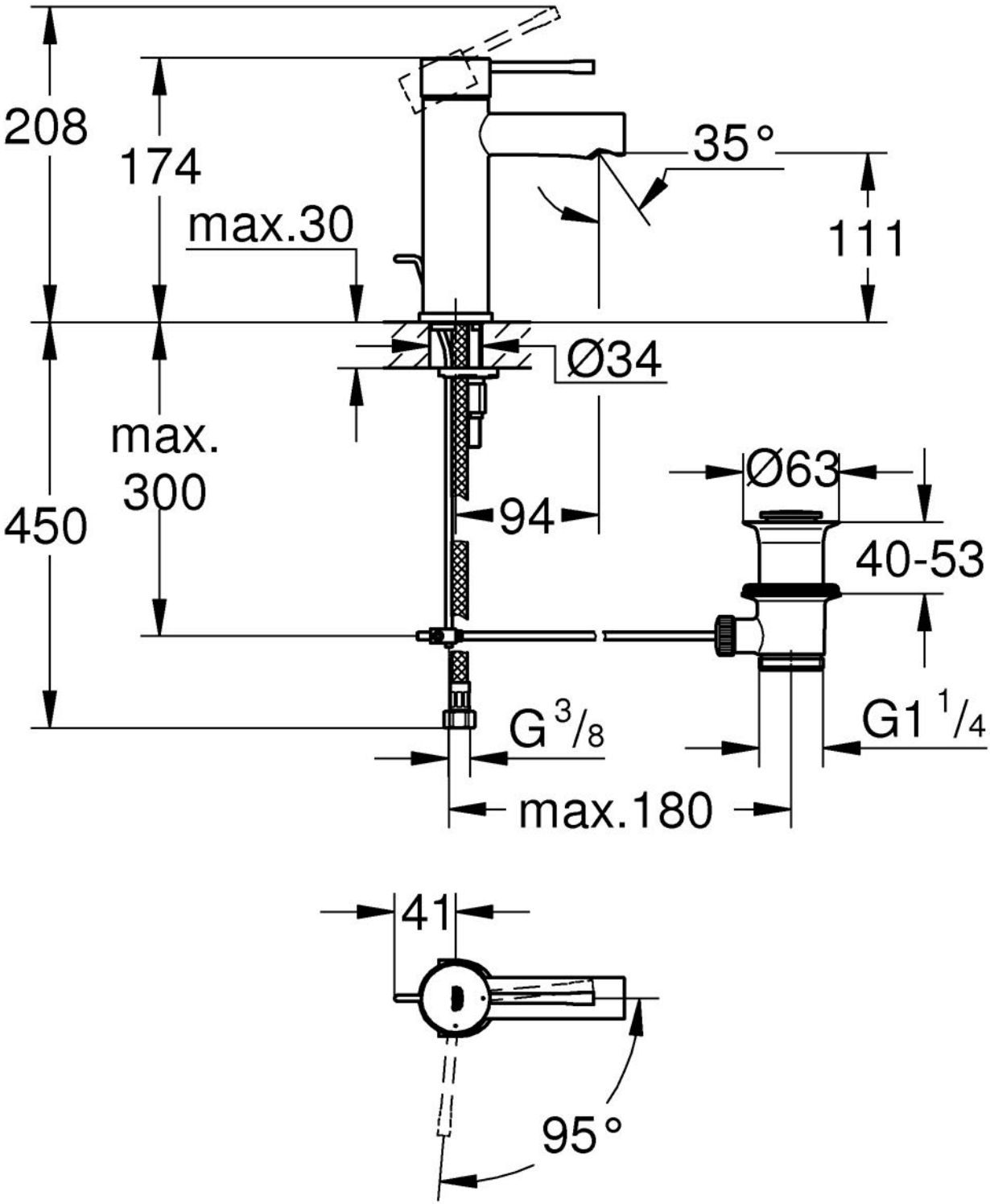
208
174
max.30
35°
111
Ø34
max.
300
450
94
Ø63
40-53
G 3/8
G1 1/4
max.180
41
95°