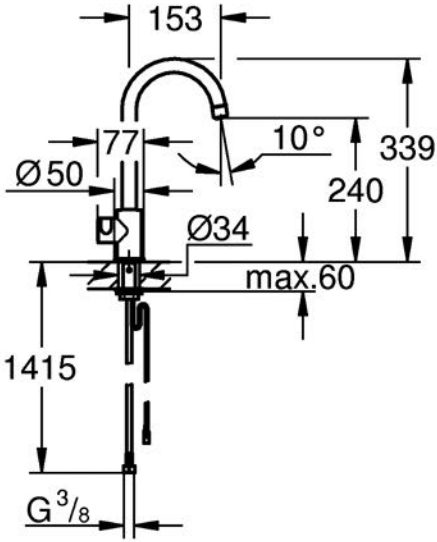
153
339
77
10°
Ø50
240
Ø34
max.60
1415
G 3/8

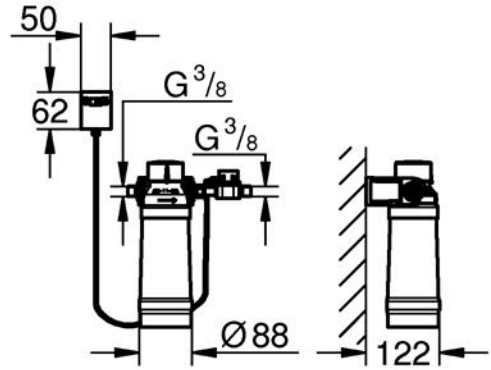
50
62
G 3/8
G 3/8
Ø88
122

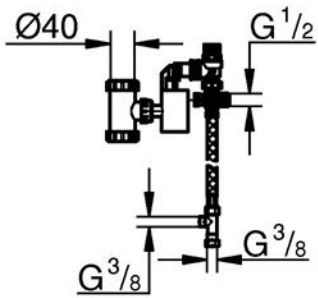
Ø40
G 1/2
G 3/8
G 3/8

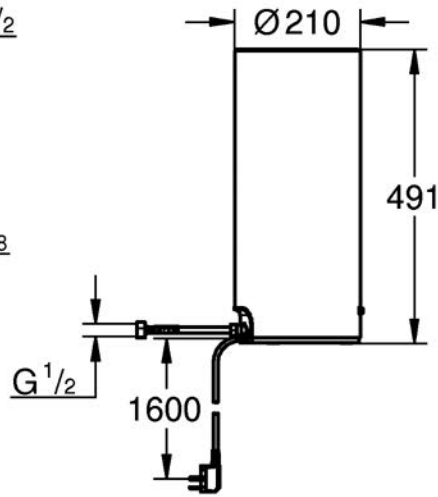
Ø210
491
G 1/2
1600