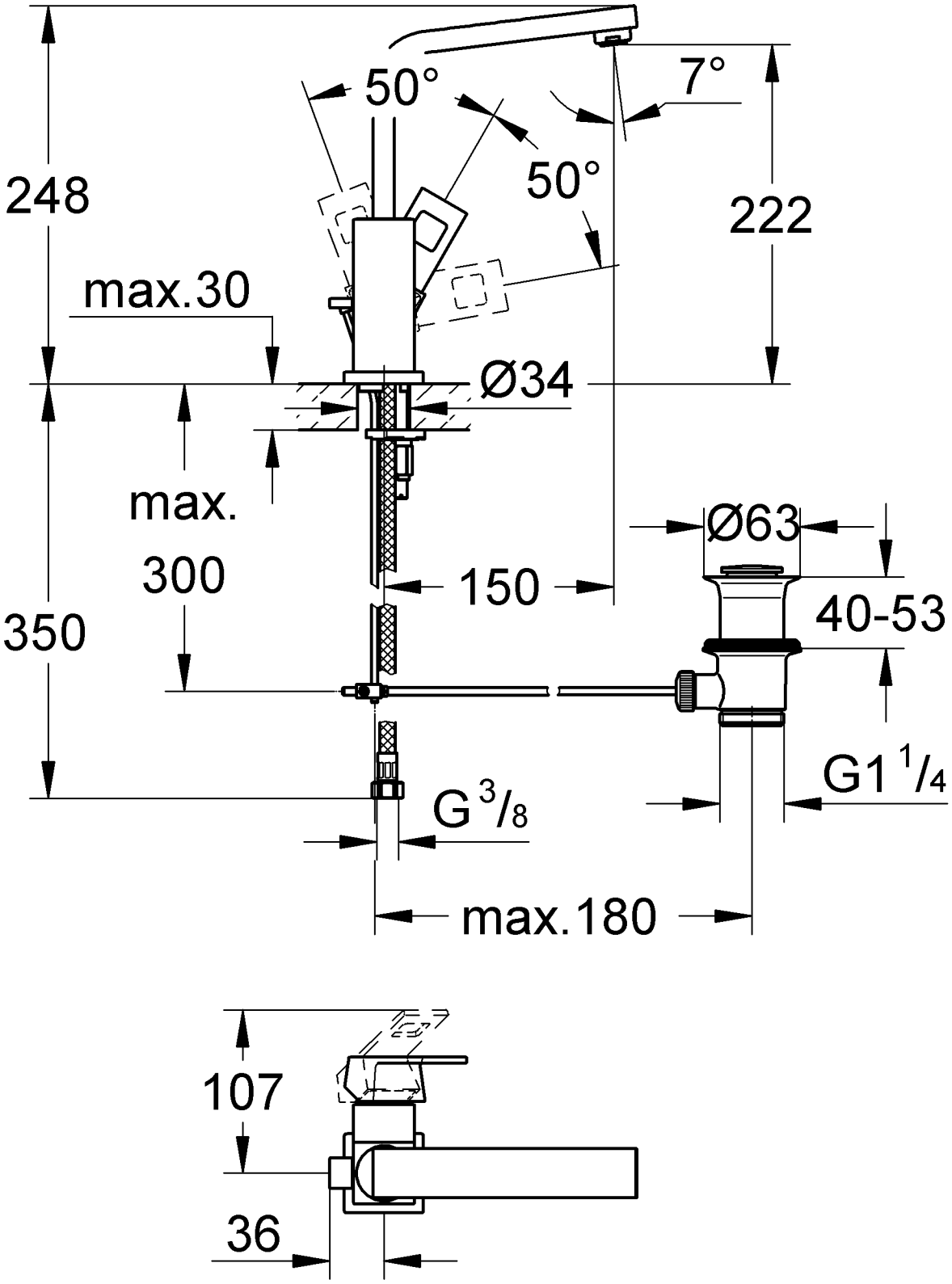
50°
7°
50°
248
222
max.30
Ø34
max.
300
Ø63
150
40-53
350
G1 1/4
G 3/8
max.180
107
36