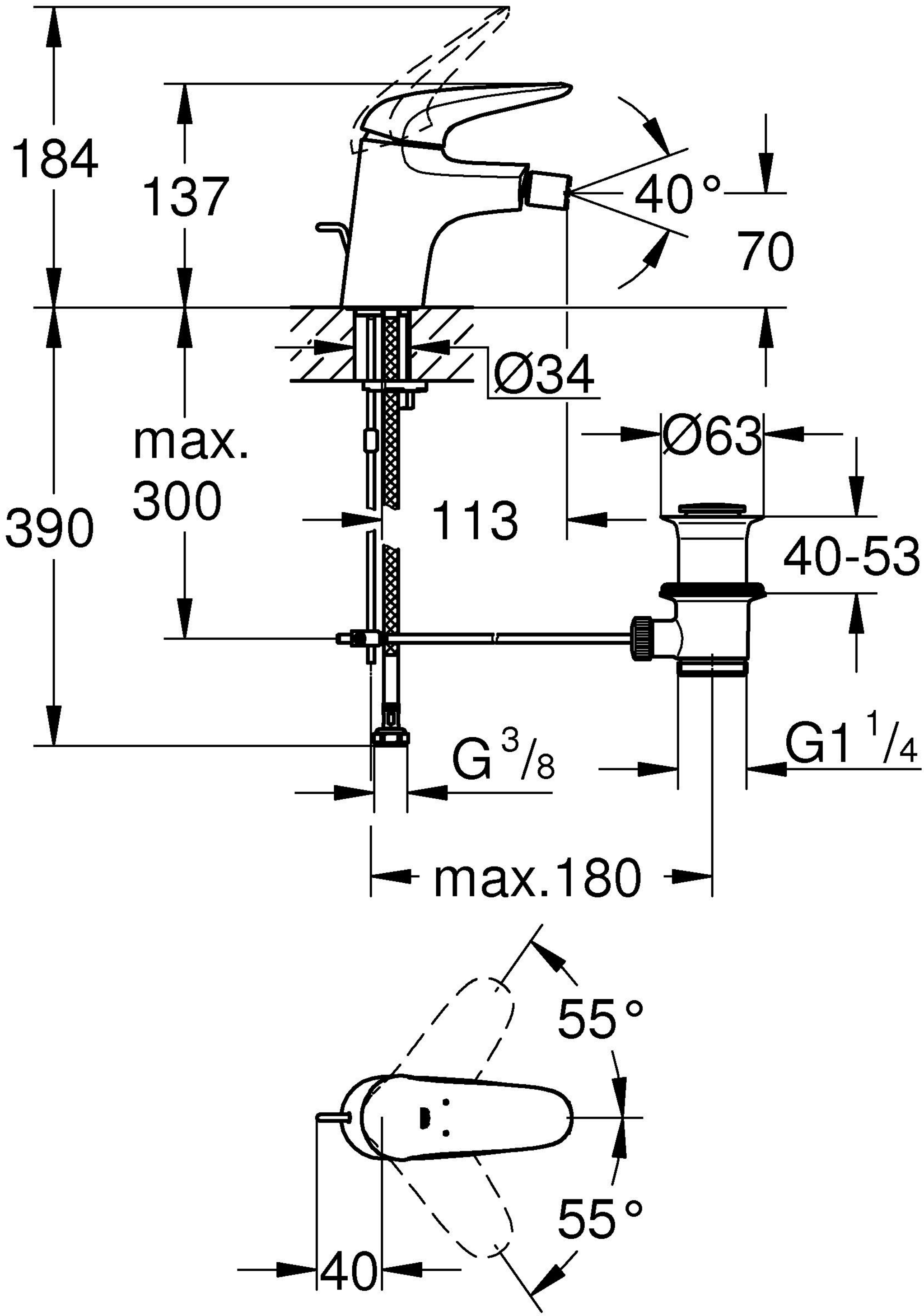
184
137
40°
70
Ø34
max.
300
Ø63
390
113
40-53
G 3/8
G1 1/4
max.180
55°
55°
40