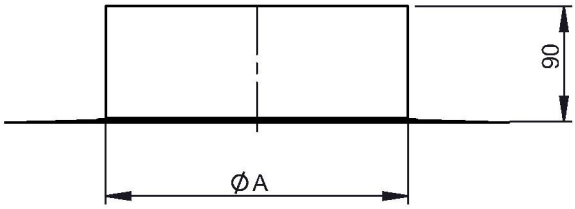

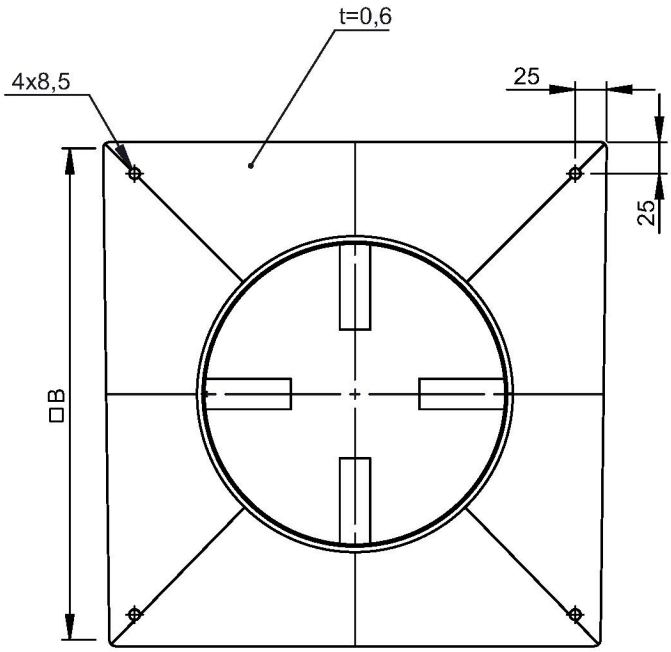

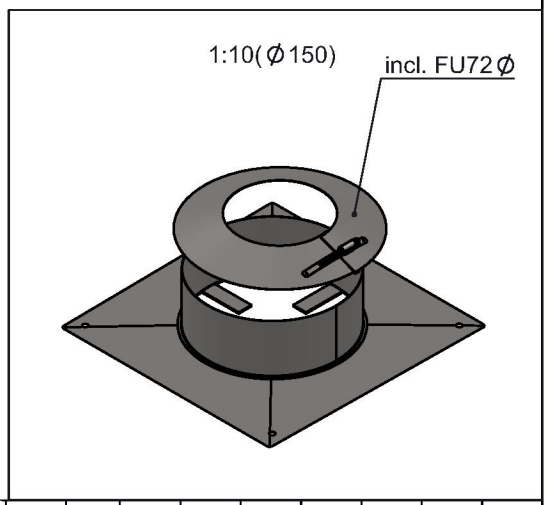

Ø					115	120	130		150	160	180
A				190			210		240		260
B					400						420
kg					1,11	1,12	1,13		1,14	1,15	1,26

notes:

DIN ISO 13920 Tolerances B

revisions-no.

	date	name
drawn by	12.10.20	JAD
checked by	12.10.20	SWA
approved by	12.10.20	JWY
modified by		

jeremias® CHIMNEY SYSTEMS

description: End cap with storm collar

code: **FU25Ø**

drawing-no.: **01-20-5020-000**

scale: 1:1

format: A4

sheet: 1 of 1

© jeremias GmbH. All rights reserved, also regarding any disposal, exploitation, editing, distribution, as well as in the event of applications for industrial property rights.