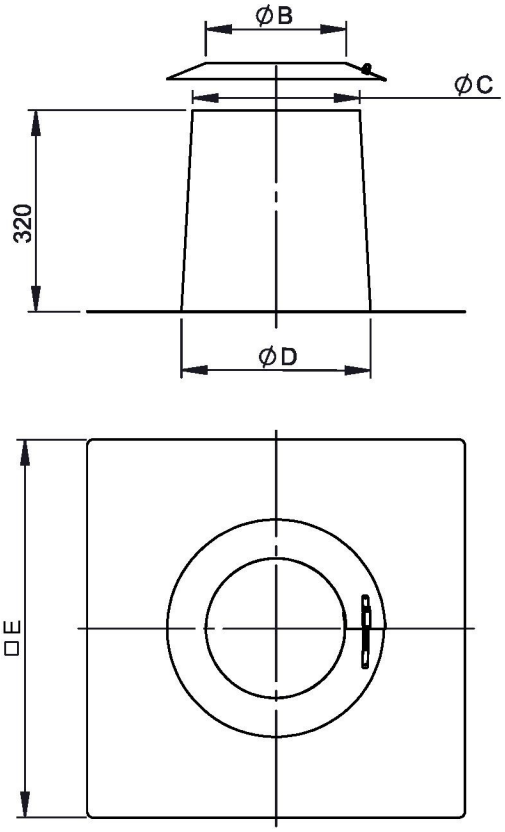

mögliche Materiallösungen	
WGR	**Material**
2R2-ZUAC52Ø	1.4301(304)-2R(IIID)
2B2-ZUAC52Ø	1.4301(304)-2B(IIIC)
2J2-ZUAC52Ø	1.4301(304)-2J(GEB)
CU-ZUAC52Ø	2.0090(SFCU)
VZ-ZUAC52Ø	1.0226(DX51D)-VZ(VZ)

Ø - System-Außendurchmesser
(gilt für doppelwandige Systeme)

M 1:12 (Ø215)

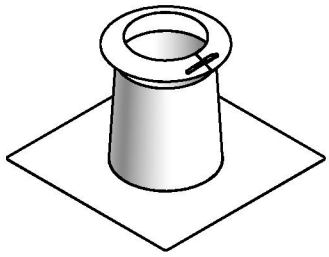

Ø																					**195**	
B																					195	
C																			240			
D																			275			
E																			575			
kg																					2,83	
Ø			**215**		**225**				**245**													
B			215		225				245													
C		265				290																
D		300				325																
E		600				625																
kg			3,05		3,27				3,61													
Ø																						
B																						
C																						
D																						
E																						
kg																						

notes:

DIN ISO 13920 Tolerances B		
revisions-no. A	mm / kg	
	date	name
drawn by	17.02.2021	TRA
checked by		
approved by		
modified by	24.11.2021	USC

jeremias® CHIMNEY SYSTEMS

description: Flachdachdurchführung konisch mit Wetterkragen

code: **WGR-ZUAC52Ø**

drawing-no.: **01-07-04-5400-000**

scale: 1:12

format: A4

sheet: 1 of 1

© jeremias GmbH. All rights reserved, also regarding any disposal, exploitation, editing, distribution, as well as in the event of applications for industrial property rights.