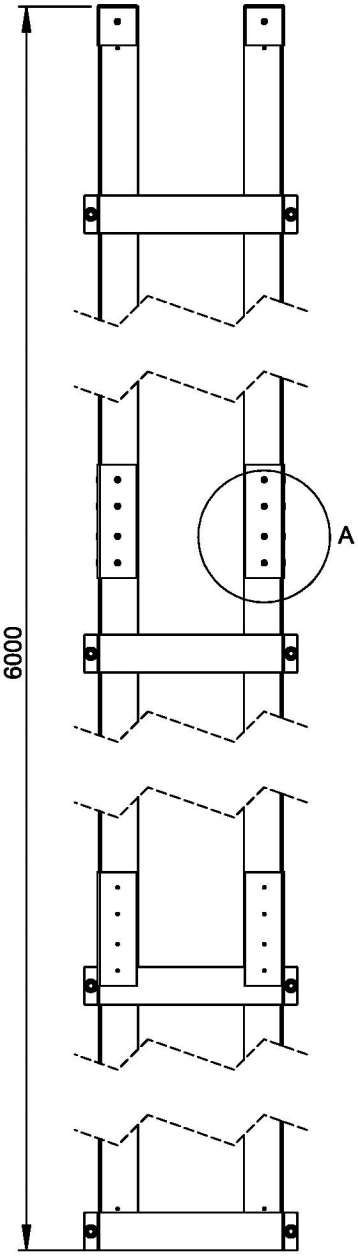

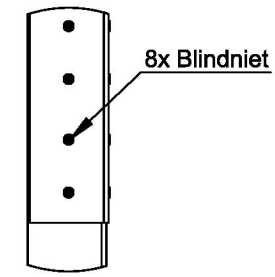

A (1 : 5)

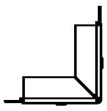

B (1 : 5)

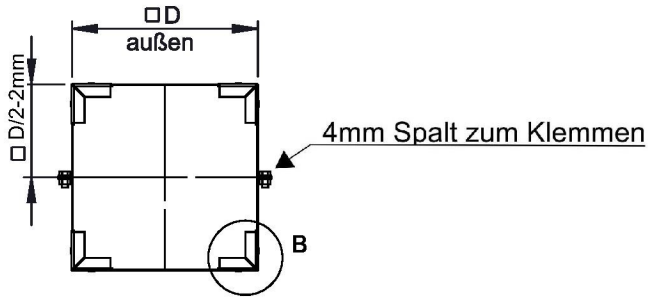

M 1:20 (□140/240)

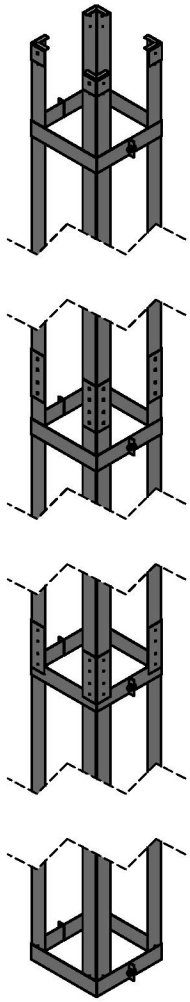

A - ist Schachtmaß innen in mm
C - ist Schachtmaß außen in mm

□			190/290	210/310	230/330	240/340					
A			190	210	230	240					
C			290	310	330	340					
D			296	316	336	346					
kg			34,28	34,5	34,72	34,83					

notes:

DIN ISO 13920 Tolerances B

revisions-no. A2

mm / kg

	date	name
drawn by	13.09.2018	KAB
checked by		
approved by		
modified by	08.03.2019	NGR

jeremias® CHIMNEY SYSTEMS

description: Statikset für Schacht 6 m hoch mit 7 Bügeln

code: LS...X...6-1502

drawing-no.: 01-05-10-0561-000

scale: 1:10

format: A4

sheet: 1 of 1

© jeremias GmbH. All rights reserved, also regarding any disposal, exploitation, editing, distribution, as well as in the event of applications for industrial property rights.