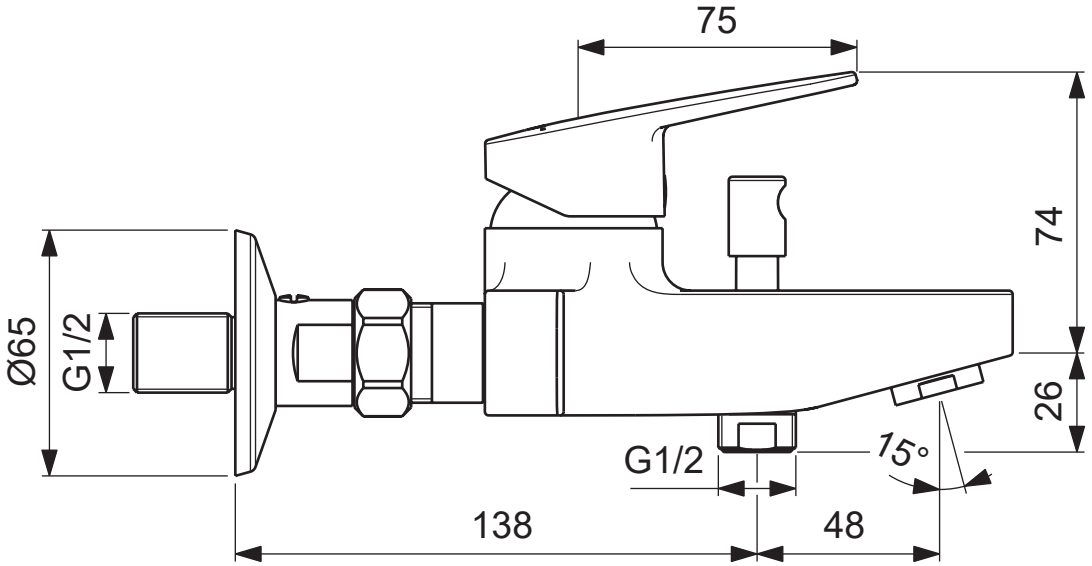
75
74
26
Ø65
G1/2
G1/2
15°
138
48

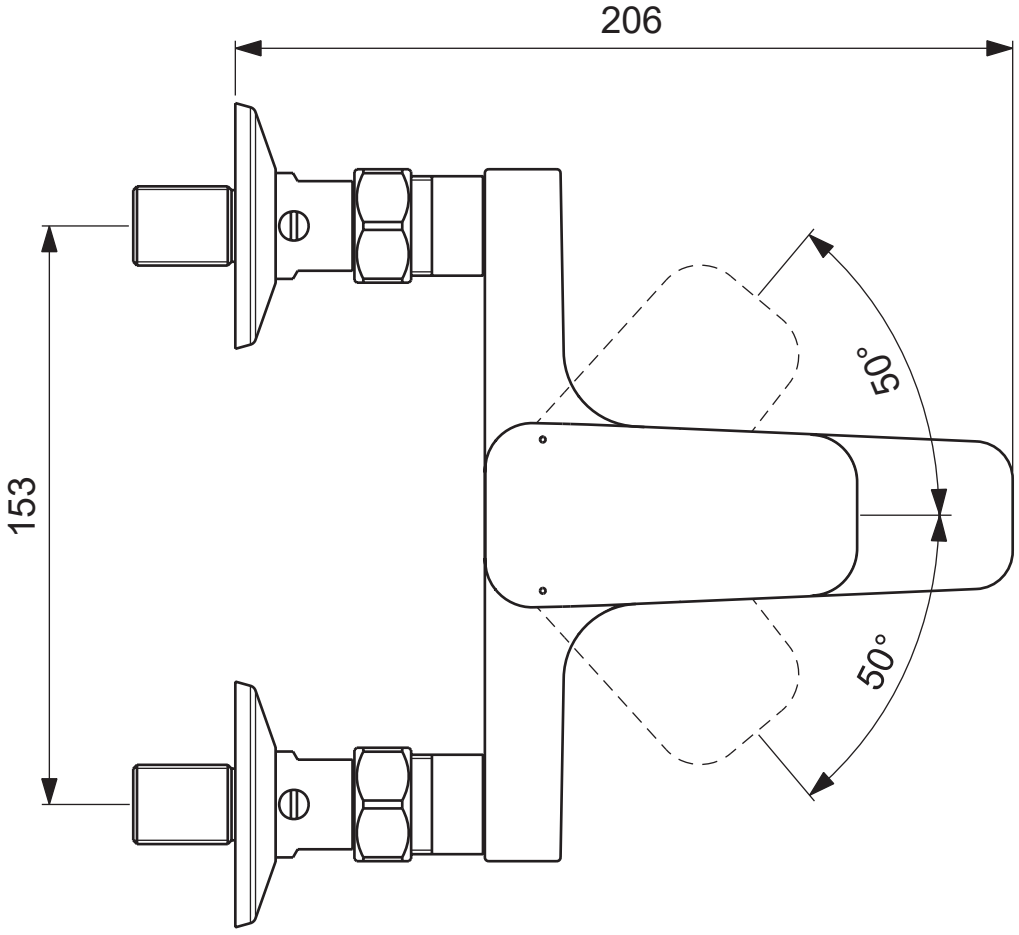
206
153
50°
50°