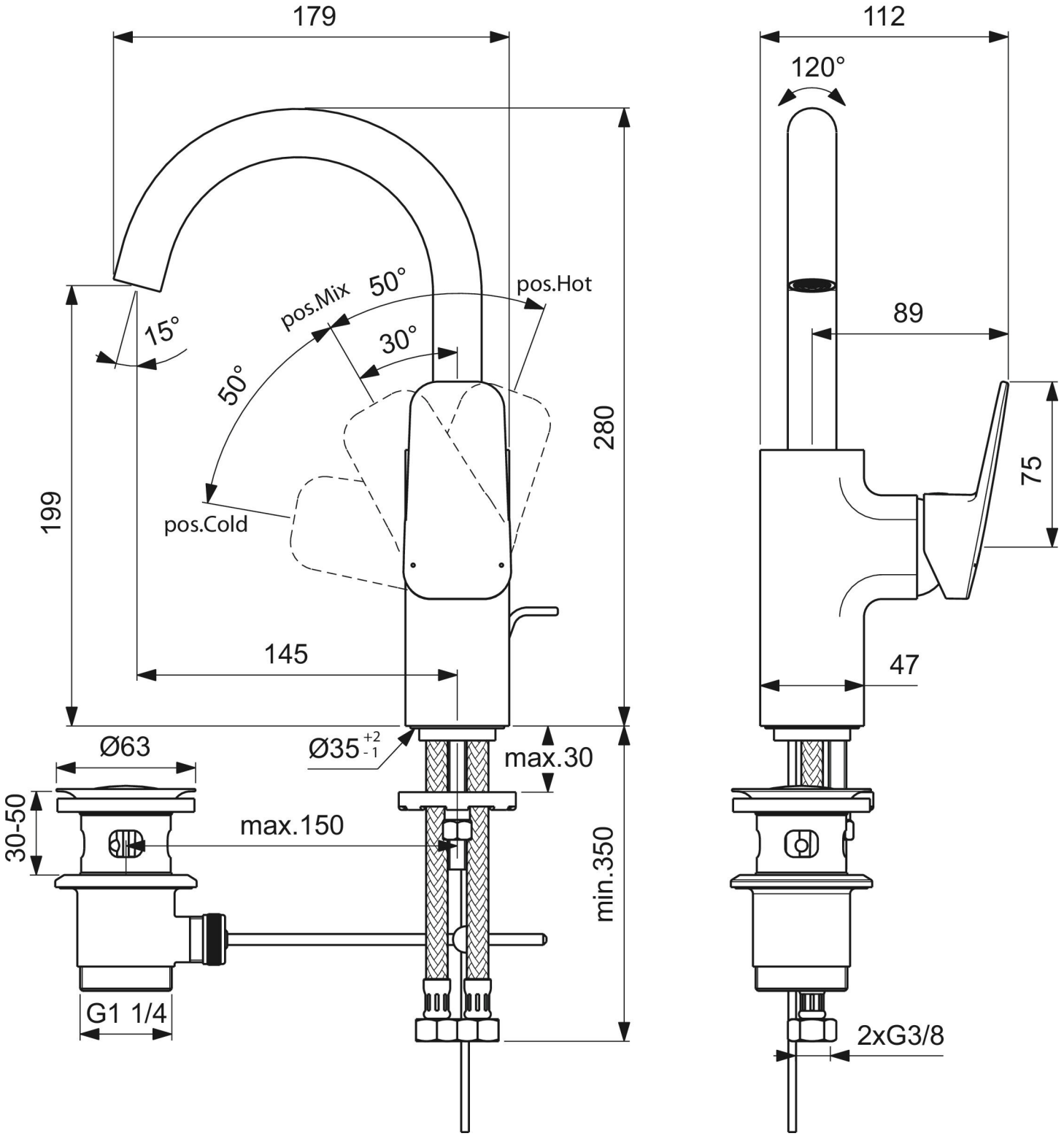
179
112
120°
15°
pos.Mix
50°
pos.Hot
30°
50°
89
280
75
199
pos.Cold
145
47
Ø63
Ø35 +2 -1
max.30
30-50
max.150
min.350
G1 1/4
2xG3/8