HU 60 Blocktype
Varianto
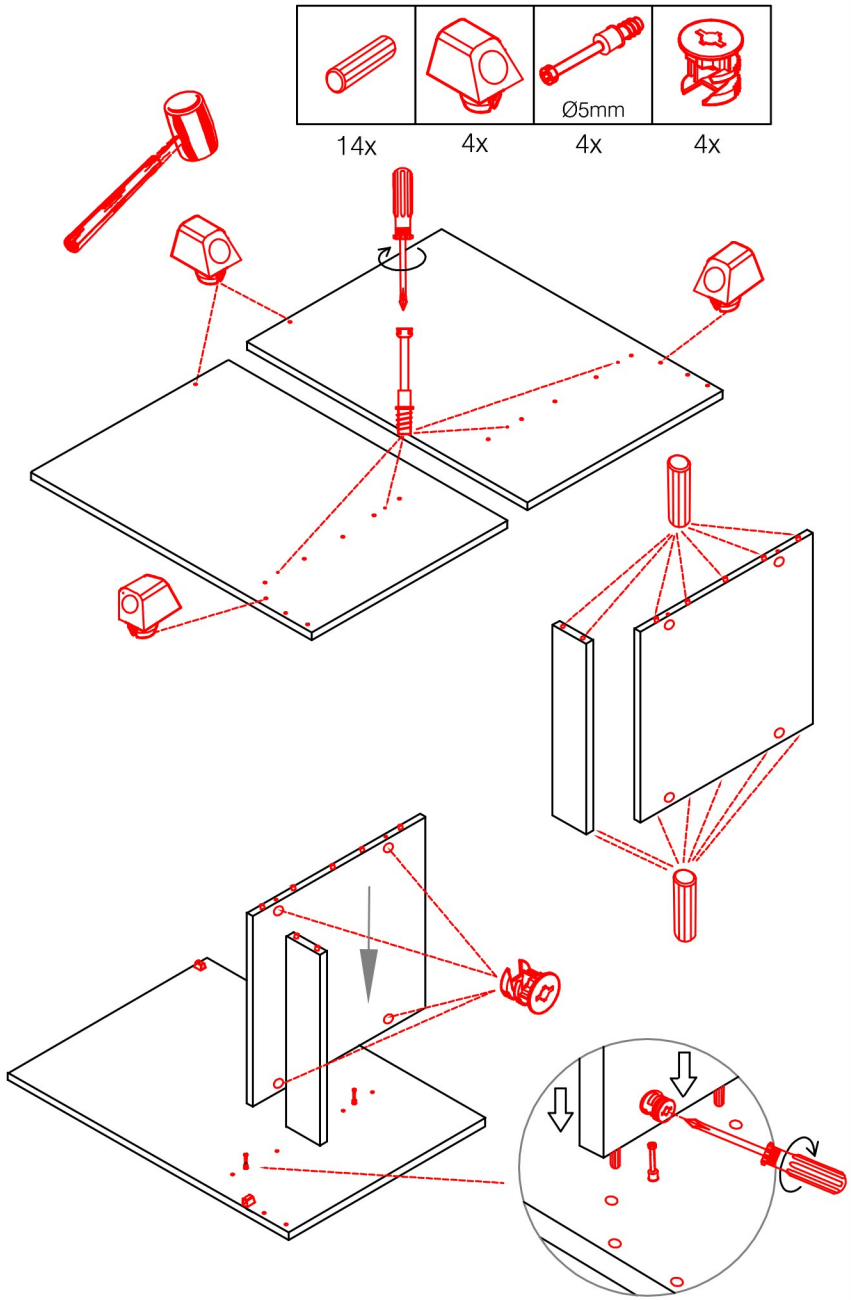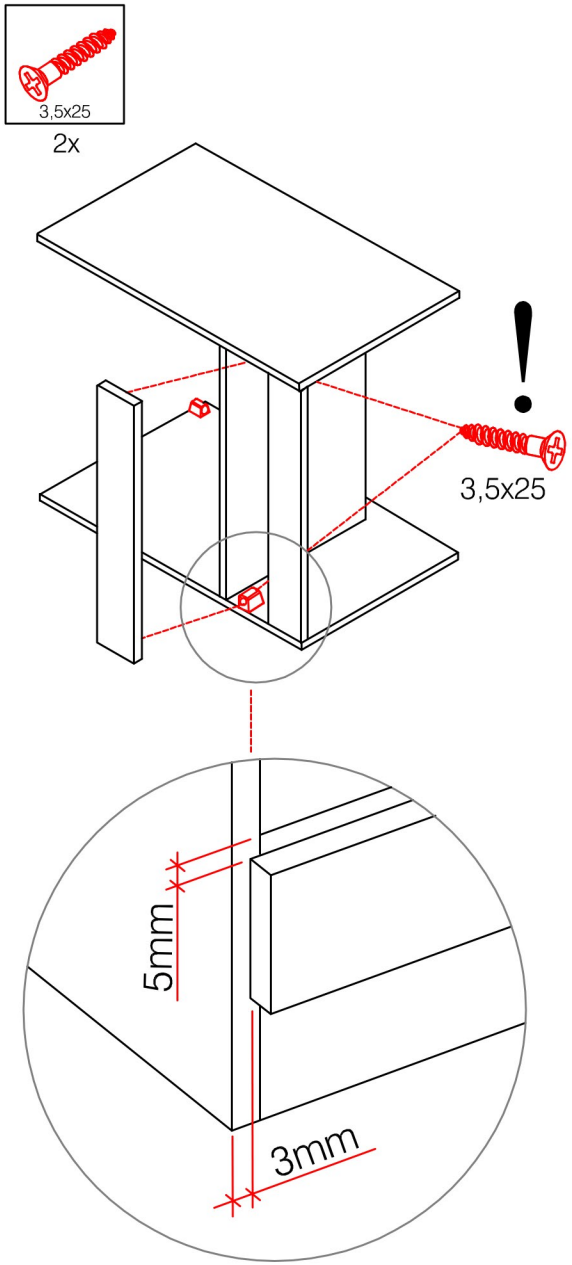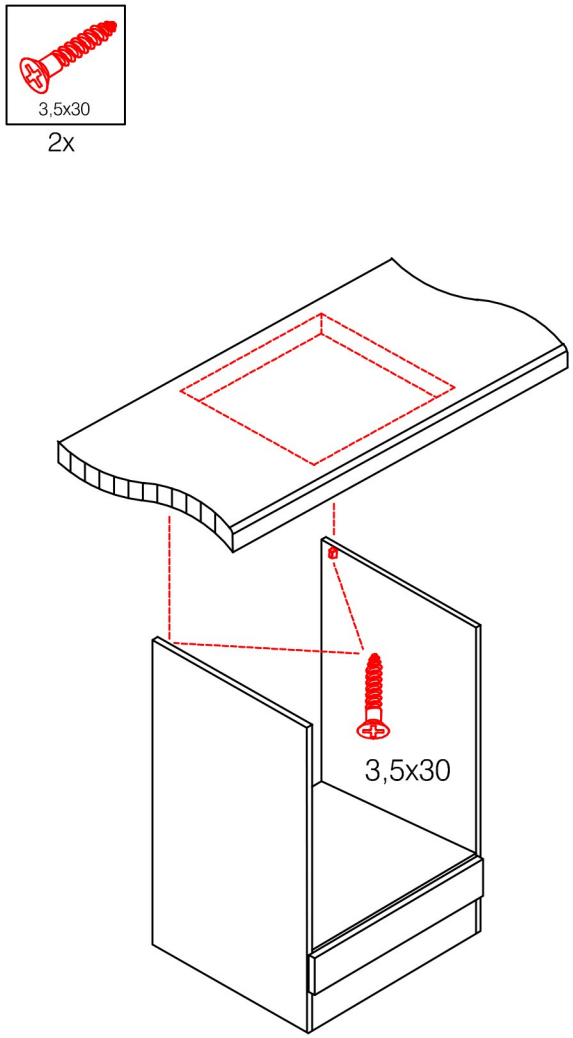
Montageanleitung / Notice de montage / Assembly instruction