DSPU 100 Blocktype
Varianto

Montageanleitung / Notice de montage / Assembly instruction

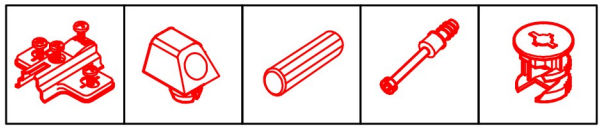

4x 4x 14x 4x 4x

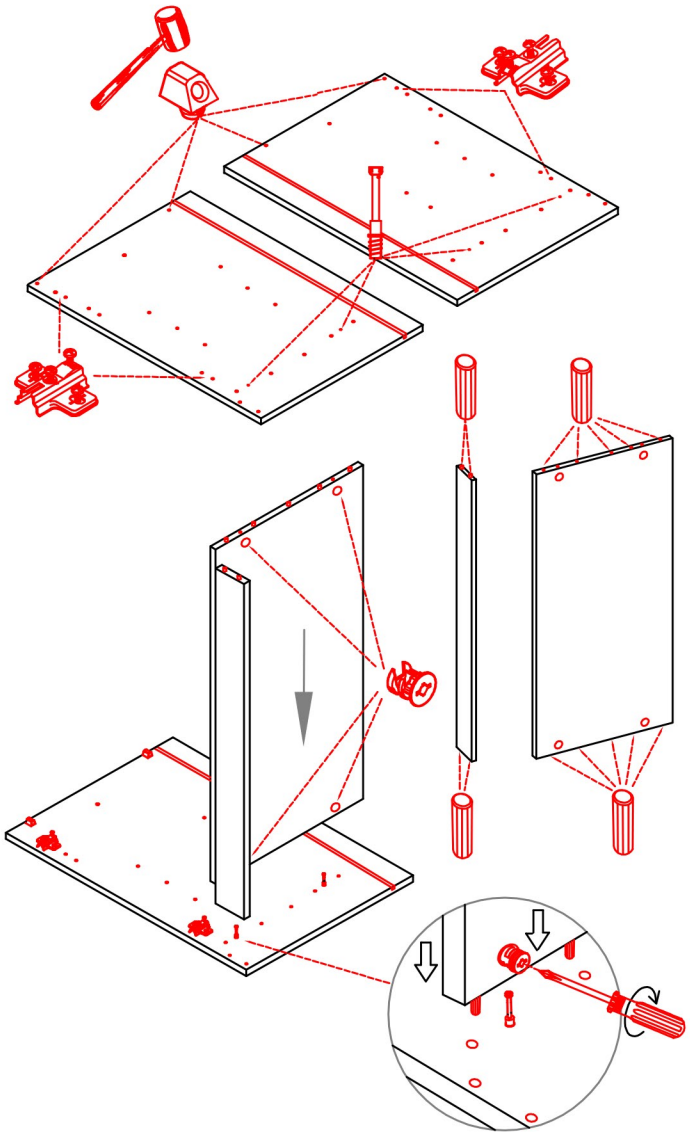

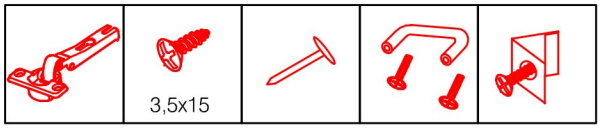

4x 8x 10x 2x 2x

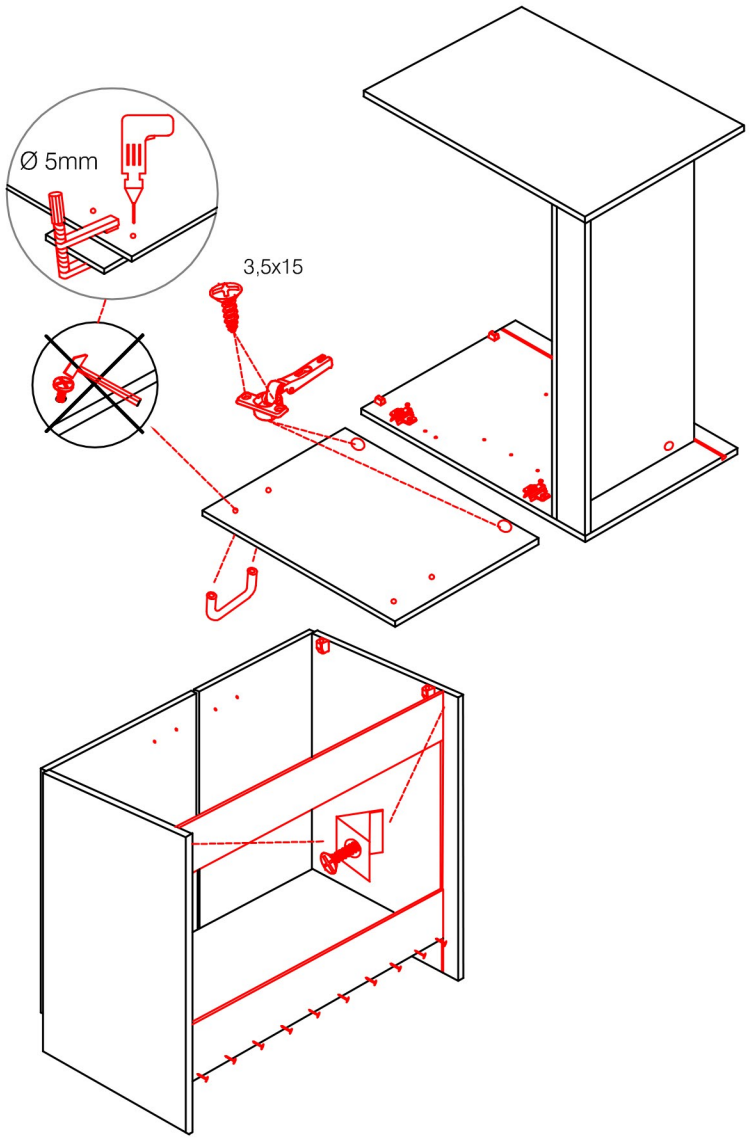
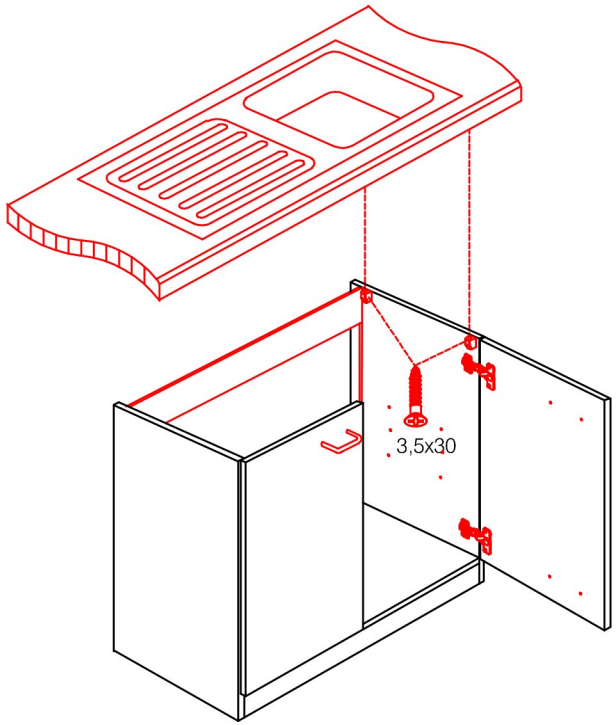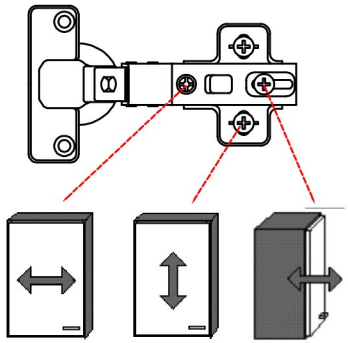
4x